

PUMP JACK ASSEMBLY - PLAN VIEW
1/4"=1'-0"

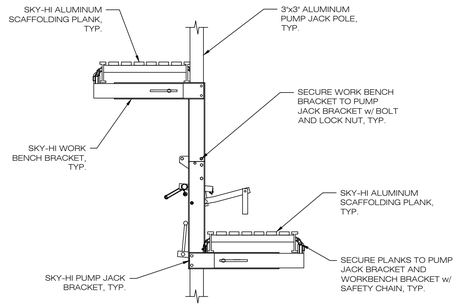

A DETAIL
1/4"=1'-0"

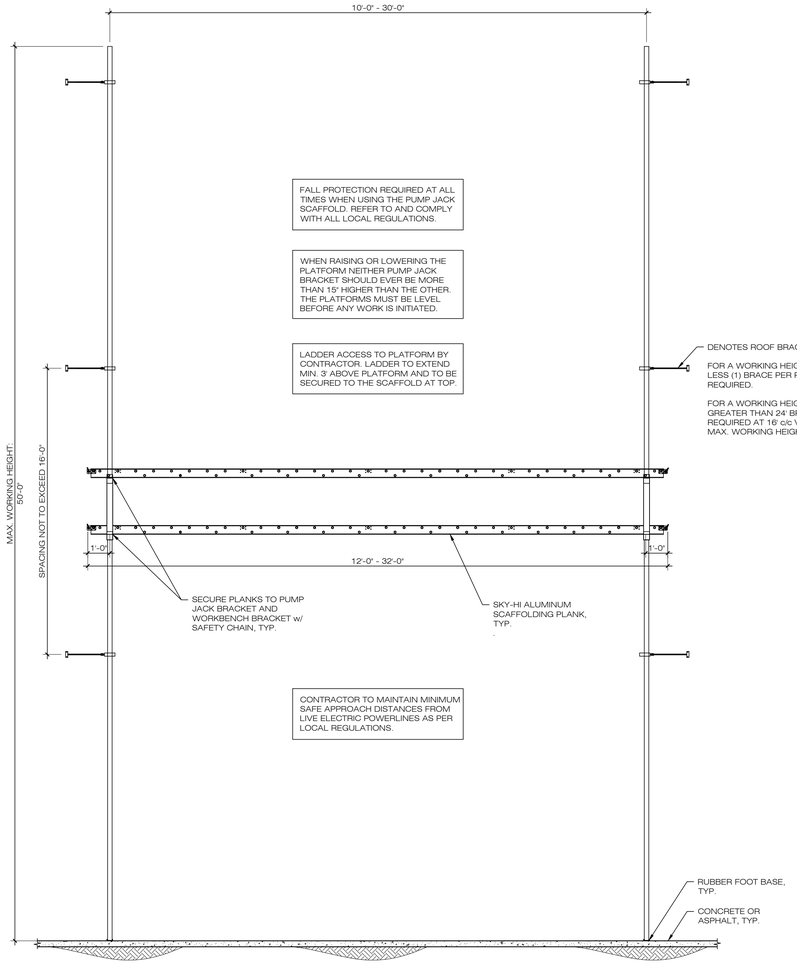

1 ELEVATION
1/4"=1'-0"

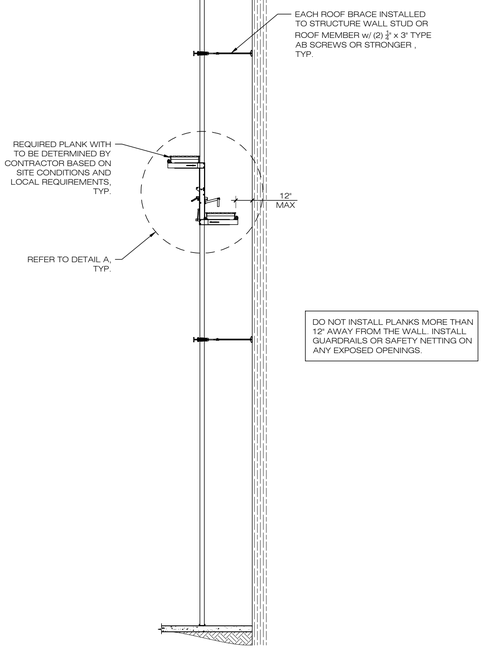

2 SECTION
1/4"=1'-0"

REFER TO "SKY-HI INDUSTRIES - PUMP JACK SCAFFOLDING - OPERATION & INSPECTION INSTRUCTIONS" FOR ERECTION, OPERATION, AND INSPECTION DETAILS.

REFER TO "TEST REPORT: CONCENTRATED LOAD TEST: PUMP JACK SCAFFOLD" AND "TEST REPORT: DISTRIBUTED LOAD TEST: 12'x12', 12'x16', 12'x20', 12'x24' AND 12'x32' ALUMINUM SCAFFOLDING PLANKS" BY aDB ENGINEERING AND PREPARED FOR SKY-HI INDUSTRIES INC. FOR TESTING DETAILS .

1 24'x24' SCAFFOLD PLANKS WERE TESTED AND CONFIRMED ANALYTICALLY TO SUPPORT A LOAD OF 50PSF AT A 20' MAX. SPAN. 20'x24' AND 14'x24' SCAFFOLD PLANKS WERE CONFIRMED ANALYTICALLY TO SUPPORT A LOAD OF 50PSF AT A 22' MAX. SPAN. REFER TO "TEST REPORT: UNIFORM DISTRIBUTED LOAD TEST: 24'x24', 20'x24' & 14'x24' ALUMINUM SCAFFOLDING PLANKS" BY aDB ENGINEERING AND PREPARED FOR SKY-HI INDUSTRIES INC. FOR TESTING DETAILS .

GENERAL NOTES:

1. DESIGN CRITERIA:

   DESIGN LOADS:

   LIVE LOAD — 500 LBS TOTAL LOAD, F.S. = 4:1
   DEAD LOAD — SELF WEIGHT OF SCAFFOLD

   F.S. = 4:1 AGAINST OVERTURNING

   THIS SCAFFOLD MAY NOT BE COVERED BY ANY ENCLOSURE MATERIAL.

   DESIGN CODES:

   SCAFFOLD DESIGN IS BASED ON SOUND ENGINEERING PRACTICE AND REFERENCES THE FOLLOWING REGULATIONS:

   - CSA Z797-09 "CODE OF PRACTICE FOR ACCESS SCAFFOLD."
   - CSA S269.2-16 "ACCESS SCAFFOLDING FOR CONSTRUCTION PURPOSES"

   SCAFFOLD DESIGN IS IN COMPLIANCE WITH LOCAL REGULATIONS

   THE PROFESSIONAL ENGINEERS SEAL ON THIS DRAWING COVERS THE SCAFFOLD EQUIPMENT AS SHOWN ON THIS DRAWING ONLY. THIS APPROVAL DOES NOT COVER THE STRUCTURE'S CAPABILITY TO SAFELY SUSTAIN THE LOADS IMPARTED ON IT BY THE SCAFFOLD EQUIPMENT SHOWN HEREIN. IT IS THE RESPONSIBILITY OF THE CONTRACTOR TO CONFIRM WITH THE ENGINEER OF RECORD THAT THE STRUCTURE HAS ADEQUATE CAPACITY TO SUPPORT ALL LOADS.

2. SCAFFOLD CONSTRUCTION:

   THIS SCAFFOLD ERECTION DRAWING SPECIFICALLY SHOWS THE ARRANGEMENT OF COMPONENTS FOR THE SCAFFOLD TO BE CONSTRUCTED.

   THE SCAFFOLD MANUFACTURER OR SUPPLIER SHALL HAVE WRITTEN ERECTION AND DISMANTLE PROCEDURES (CERTIFIED BY A PROFESSIONAL ENGINEER WHERE NECESSARY) OUTLINING THEIR SPECIFIC METHODS OF CONSTRUCTING AND DISMANTLING THE SCAFFOLD IN ACCORDANCE WITH THE ERECTION DRAWINGS SHOWN HEREIN. THE ERECTION PROCEDURES SHALL MAKE REFERENCE TO AND UTILIZE CSA Z797-09 WHERE POSSIBLE.

   THESE PROCEDURES SHALL SPECIFY THE MANUFACTURERS' INFORMATION AND TECHNICAL DATA RELATING TO SPECIFIC COMPONENTS BEING USED. THIS INFORMATION SHALL BE AVAILABLE TO THE WORKPLACE FOR REFERENCE.

   THE SCAFFOLD ERECTION DRAWING TOGETHER WITH THE MANUFACTURERS' OR SUPPLIERS' INFORMATION AND GOOD BUILDING PRACTICES SHALL PROVIDE ALL THE NECESSARY PLANS, ELEVATIONS, DATA AND INSTRUCTIONS FOR THE CORRECT AND SPECIFIC ERECTION OF THE SCAFFOLD AT THE WORK SITE.

   ALL WORKERS CONSTRUCTING THE SCAFFOLD MUST COMPLY WITH LOCAL REGULATIONS AND FALL PROTECTION REQUIREMENTS AT ALL TIMES.

3. SCAFFOLD EQUIPMENT:

   ALL EQUIPMENT MUST BE INSPECTED BY THE SCAFFOLD ERECTOR PRIOR TO USE. BENT, DAMAGED OR SUBSTANDARD MATERIAL SHALL NOT BE USED.

   PUMP JACK SCAFFOLD:

   SKY-HI PUMP JACK BRACKET, WORKBENCH BRACKET, 3'x3" ALUM. POLE AND ROOF BRACE

   POLES SHALL BE ERECTED SUCH THAT ANY DEVIATION FROM PLUMB SHALL NOT EXCEED:

   - 1/2" OVER 10 FEET or
   - 3/4" OVER 20 FEET or
   - 1-1/2" OVER THE TOTAL HEIGHT OF THE SCAFFOLD

   WORK PLATFORM:

   SCAFFOLD PLANKS SHALL BE SKY-HI ALUMINUM PLANKS.

   REFER TO THE SCAFFOLD MANUFACTURERS' OR SUPPLIERS' OWN LITERATURE FOR SPECIFIC INFORMATION RELATING TO EACH SCAFFOLD COMPONENT.

   SILLS:

   RUBBER FOOT BASE AT POLE BASE BASED ON CONCRETE OR ASPHALT BEARING SURFACE.

4. SITE CONDITIONS

   THIS SCAFFOLD ERECTION DRAWING HAS BEEN DETAILED BY aDB ENGINEERING FROM THE LATEST INFORMATION POSSIBLE.

   IT IS THE RESPONSIBILITY OF THE SCAFFOLD CONTRACTOR TO CHECK AND VERIFY ALL DIMENSIONS, ELEVATIONS, ETC. PRIOR TO STARTING CONSTRUCTION.

   aDB ENGINEERING INC. SHALL BE IMMEDIATELY NOTIFIED OF ANY DISCREPANCIES OR INCONSISTENCIES BETWEEN THIS DRAWING AND ACTUAL SITE CONDITIONS.

1. COPYRIGHT RESERVED. ALL DRAWINGS, DESIGNS, PLANS, SPECIFICATIONS AND OTHER INFORMATION SHOWN ON THIS DRAWING AND ITS CONTENT IS AN INSTRUMENT OF SERVICE AND AS SUCH IS AND REMAINS AT ALL TIMES THE EXCLUSIVE PROPERTY OF ADB STRUCTURAL ENGINEERING INC. AND SHALL NOT BE USED, MODIFIED, LOANED, OR REPRODUCED BY ANY MEANS WITHOUT THE EXPRESSED WRITTEN CONSENT OF ADB STRUCTURAL ENGINEERING INC. FOR THIS PROJECT OR ANY OTHER PROJECT.

2. THE USE OF THIS DRAWING IS LIMITED TO THE ISSUED DESCRIPTION(S) SHOWN IN THE "ISSUED - DESCRIPTION" TABLE OF THIS DRAWING. THIS DRAWING SHALL NOT BE USED FOR CONSTRUCTION UNLESS THE "ISSUED-DESCRIPTION" TABLE IS MARKED "ISSUED FOR CONSTRUCTION". THIS DRAWING SHALL NOT BE USED FOR ANY PURPOSE RELATED TO PRICING, TENDER OR COSTING UNLESS THE "ISSUED-DESCRIPTION" TABLE IS MARKED AS SUCH.

3. DO NOT SCALE THIS DRAWING. THE CONTRACTOR SHALL USE WRITTEN DIMENSIONS SHOWN ON THIS DRAWING. VERIFY ALL DIMENSIONS PRIOR TO CONSTRUCTION, AND IMMEDIATELY REPORT ANY ERRORS, OMISSIONS, OR DISCREPANCIES TO ADB STRUCTURAL ENGINEERING INC.

4. THIS DRAWING SHALL NOT BE USED FOR "SHOP DRAWINGS" AS CONSTRUCTED WORK MAY VARY FROM WHAT IS INDICATED ON THIS DRAWING. ONLY USE THIS DRAWING FOR THE PURPOSE OF "SHOP DRAWINGS" IF WRITTEN APPROVAL HAS BEEN OBTAINED FROM ADB STRUCTURAL ENGINEERING INC.

DISCLAIMER

SKY-HI INDUSTRIES

NOTES

#	DATE	ISSUED - DESCRIPTION
1	2019.07.15	REVISED AS NOTED
0	2019.05.21	ISSUED FOR CONSTRUCTION

Sean Dingley Digitally signed by Sean Dingley Date: 2019.07.15 11:45:14-07'00'

LICENSED PROFESSIONAL ENGINEER S. D. DINGLEY 100218385 PROVINCE OF ONTARIO
Jul. 15, 2019

SEAL

aDB ENGINEERING
A DINGLEY BOETTCHER CO.
#201 - 670 EVANS AVENUE, VANCOUVER, B.C. V6A 2K9
office 604.568.9373
fax 604.909.1970
email info@aDBengineering.com
web www.aDBengineering.com

SKY-HI INDUSTRIES

PUMP JACK ASSEMBLY SITE DRAWING

DATE	2019.07.15
DRAWN BY	LV
DESIGN BY	LV
SCALE	AS NOTED
JOB NUMBER	190263
SHEET	SK1